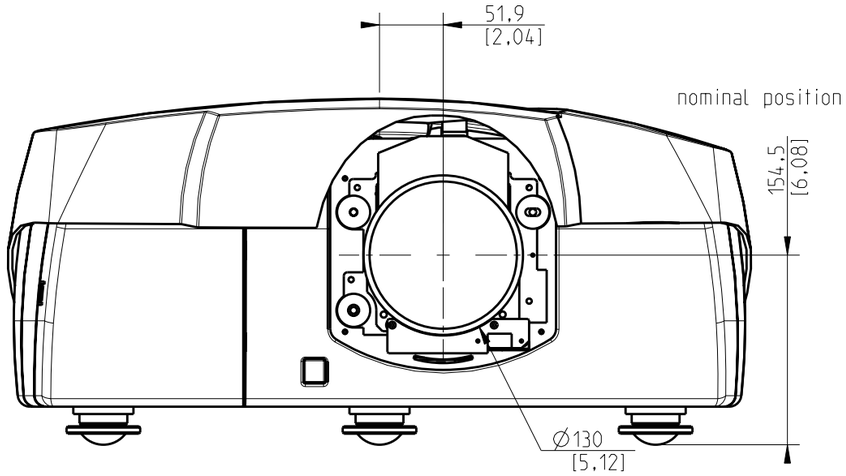

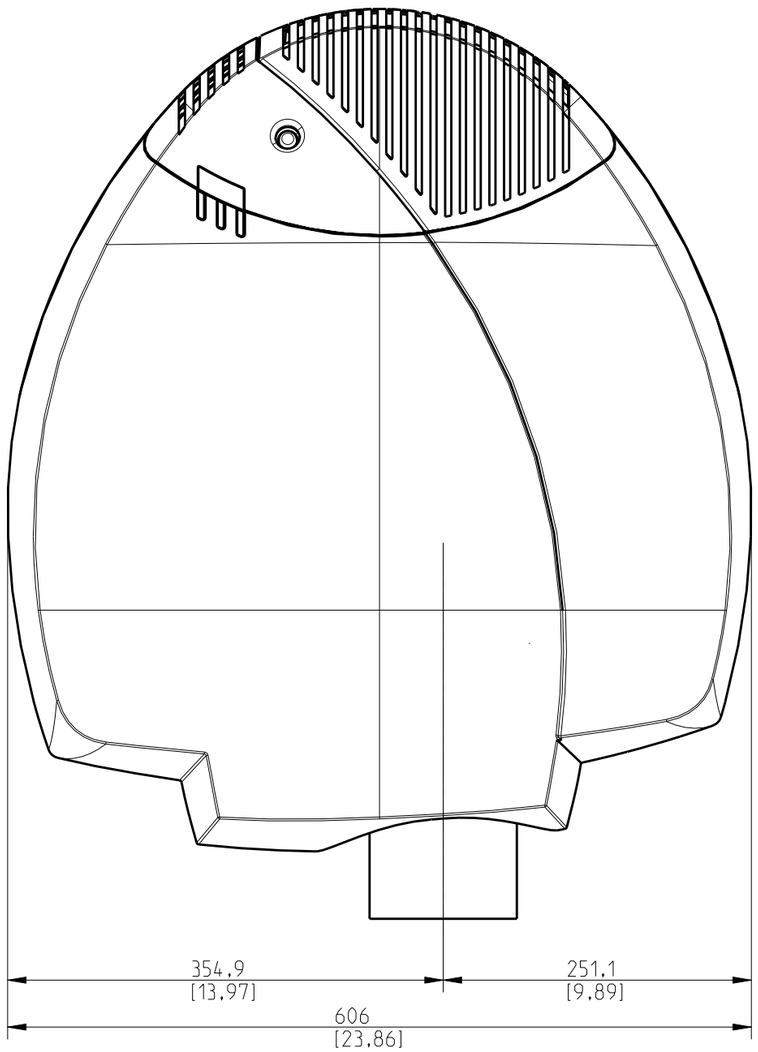

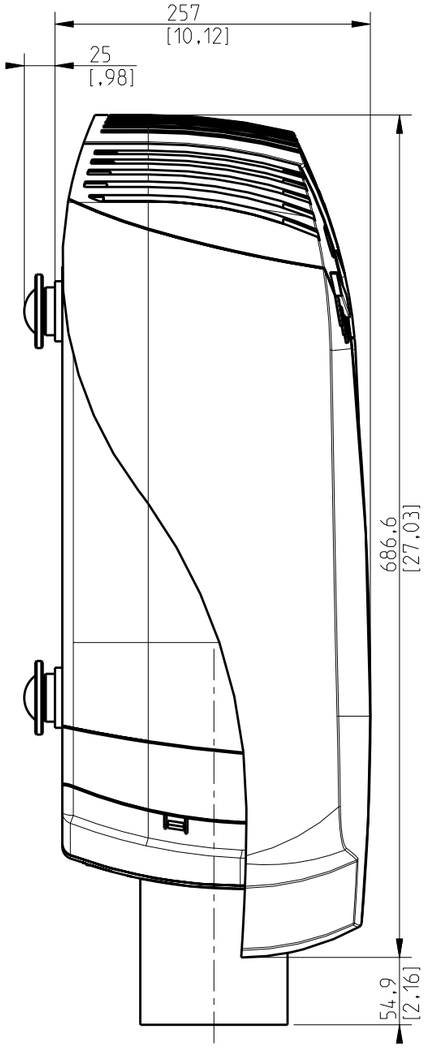

Cinema lens
R9642120 High contrast TLD (5 - 8) Optional
Throw Ratio : 5 - 8
Maximum screen size (diagonal) : 108" - 450"
Throw distance : Wide: 12 - 50 (m) , Tele: 12 - 80 (m)
Horizontal Shift : Wide: -64% => +42%, Tele: -64% => +42%
Vertical Shift : Wide: -55% => 156%, Tele: -52% => 144%

PROJ. EURO
MM

BARCO