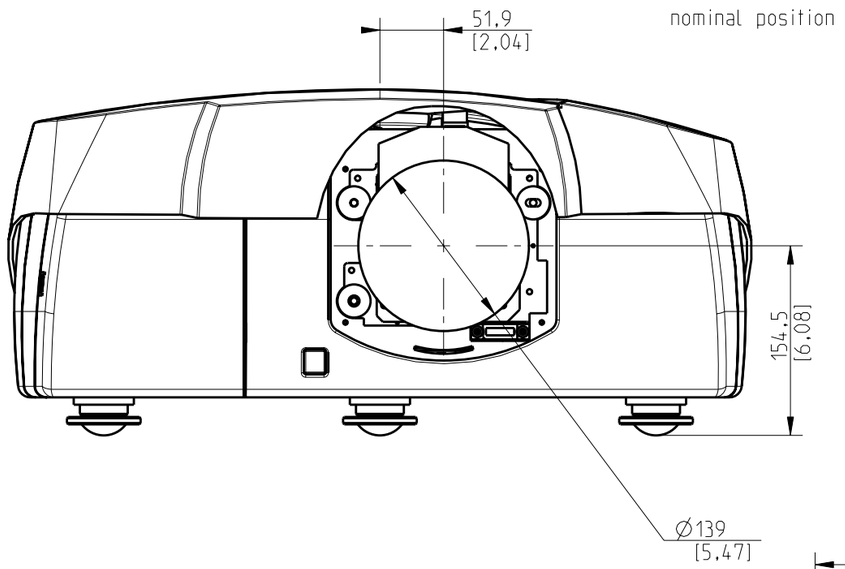

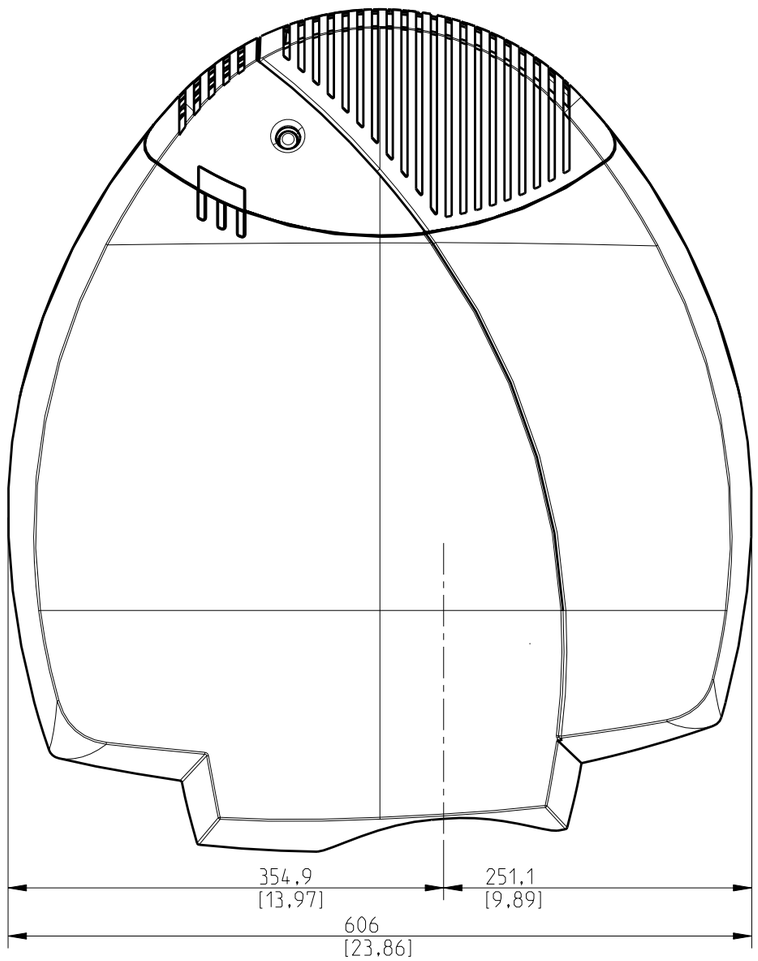

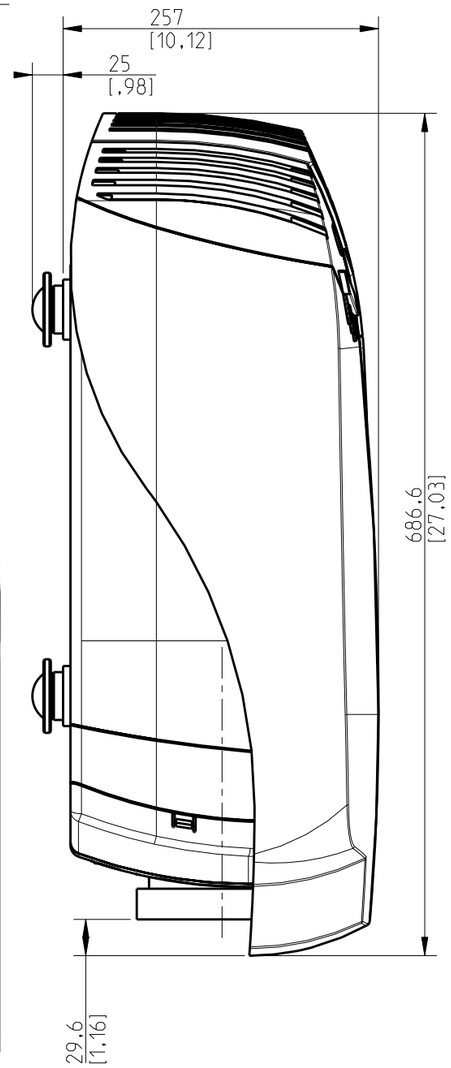

Cinema lenses
R9642080 High contrast TLD (2 - 2.8) Optional
Throw Ratio : 2 - 2.8
Maximum screen size (diagonal) : 65" - 322"
Throw distance : 2.9 - 20 (m)
Horizontal Shift : Wide: -66% => +38%, Tele: -66% => +38%
Vertical Shift : Wide: -54% => 140%, Tele: -54% => 140%

PROJ. EURO
MM

BARCO