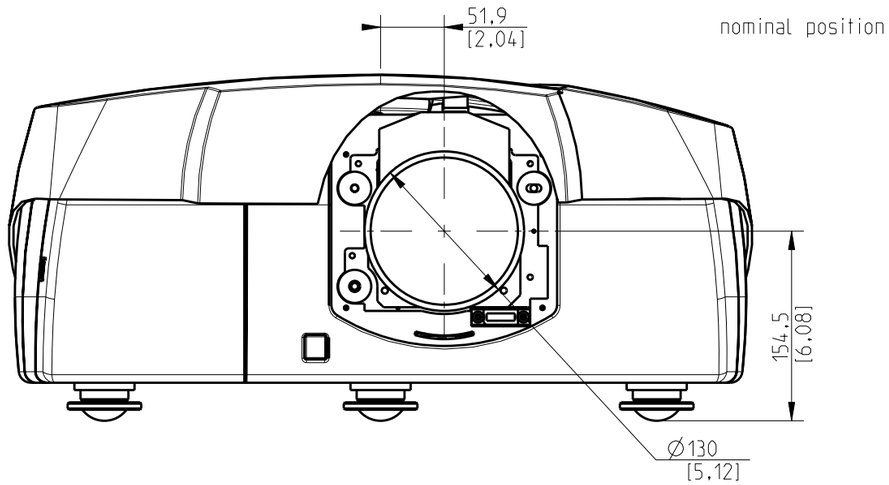

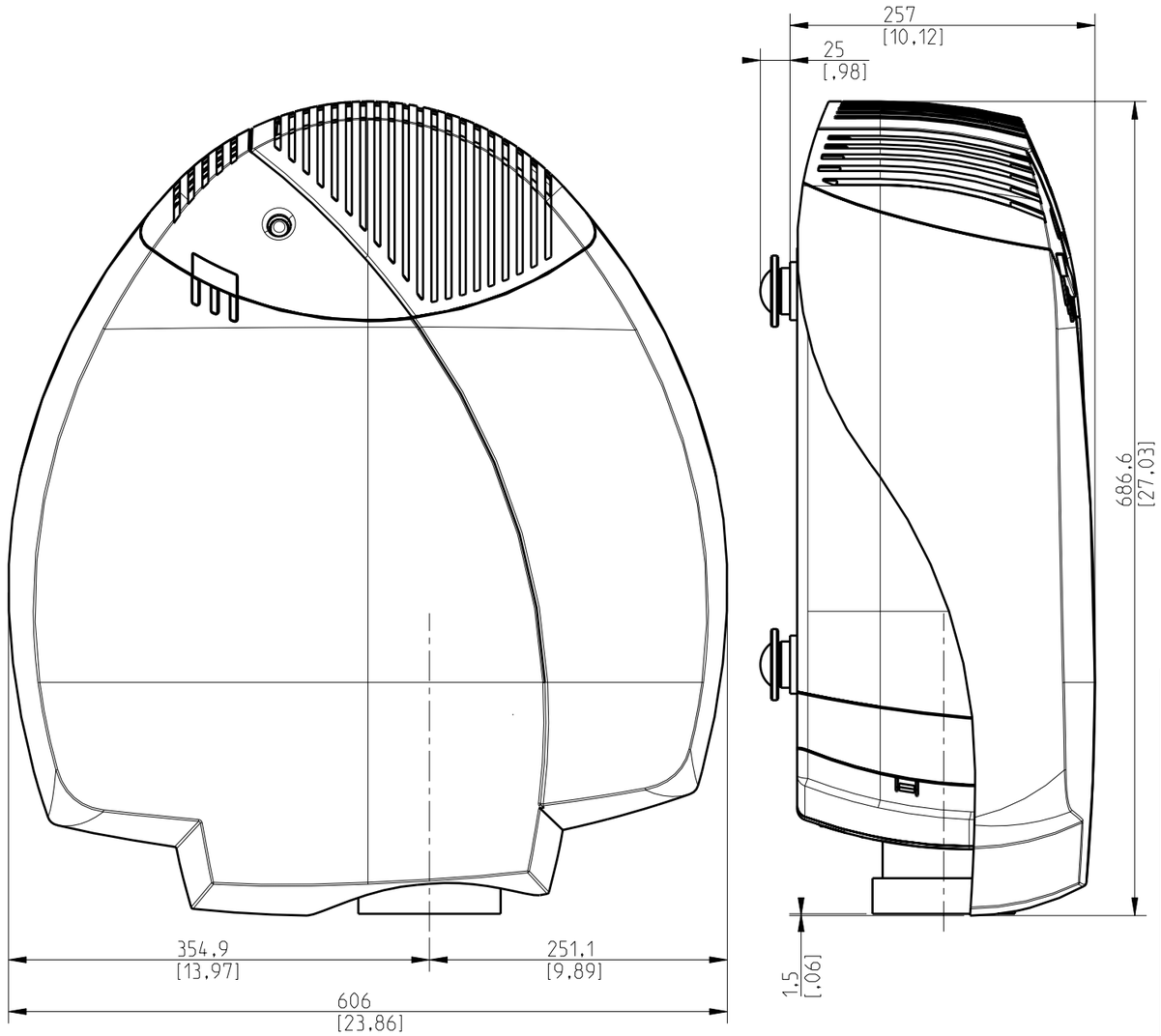

Cinema lenses
R9842349 CineVERSUM TLD (2.8 - 5) Optional
Throw Ratio : 2.8 - 5
Maximum screen size (diagonal) : 98" - 452"
Throw distance : Wide: 6.1 - 28 (m) ,Tele: 6.1 - 50 (m)
Horizontal Shift : Wide: -64% => +42%, Tele: -64% => +42%
Vertical Shift : Wide: -55% => 156%, Tele: -52% => 144%

PROJ. EURO
MM

BARCO