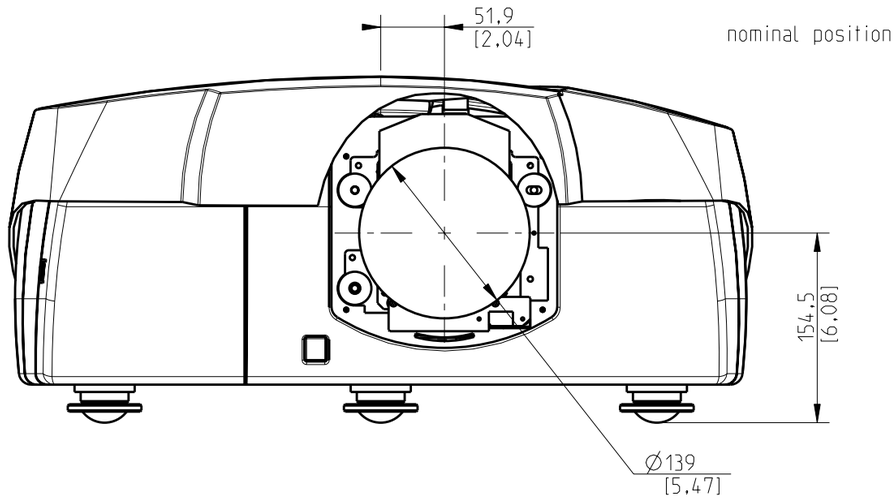

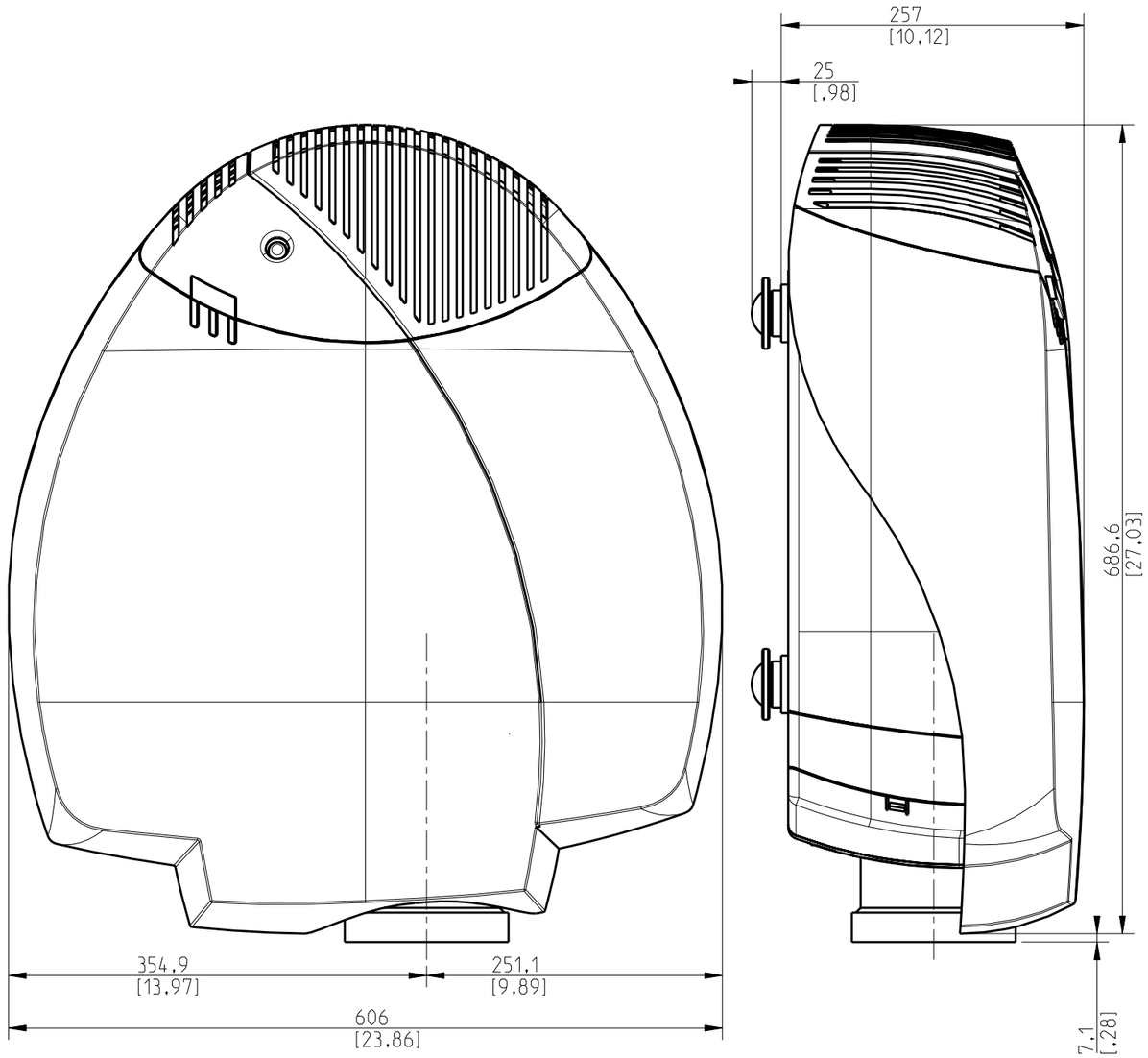

Cinema lenses
R9642060 High contrast TLD (1.6 - 2) Optional }
Throw Ratio 1.6 - 2
Maximum screen size (diagonal) 65" - 360"
Throw distance : 2.3 - 16 (m)
Horizontal Shift : Wide: -66% => +38%, Tele: -66% => +38%
Vertical Shift : Wide: -56% => 136%, Tele: -56% => 136%

PROJ. EURO
MM

BARCO