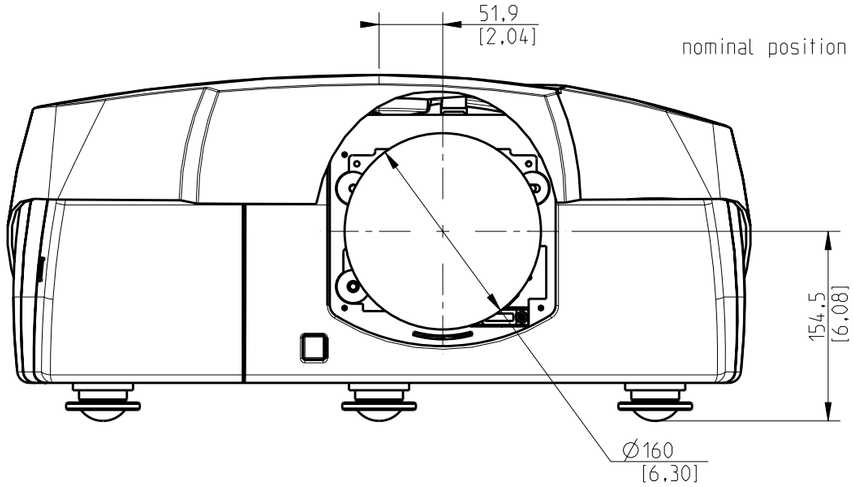

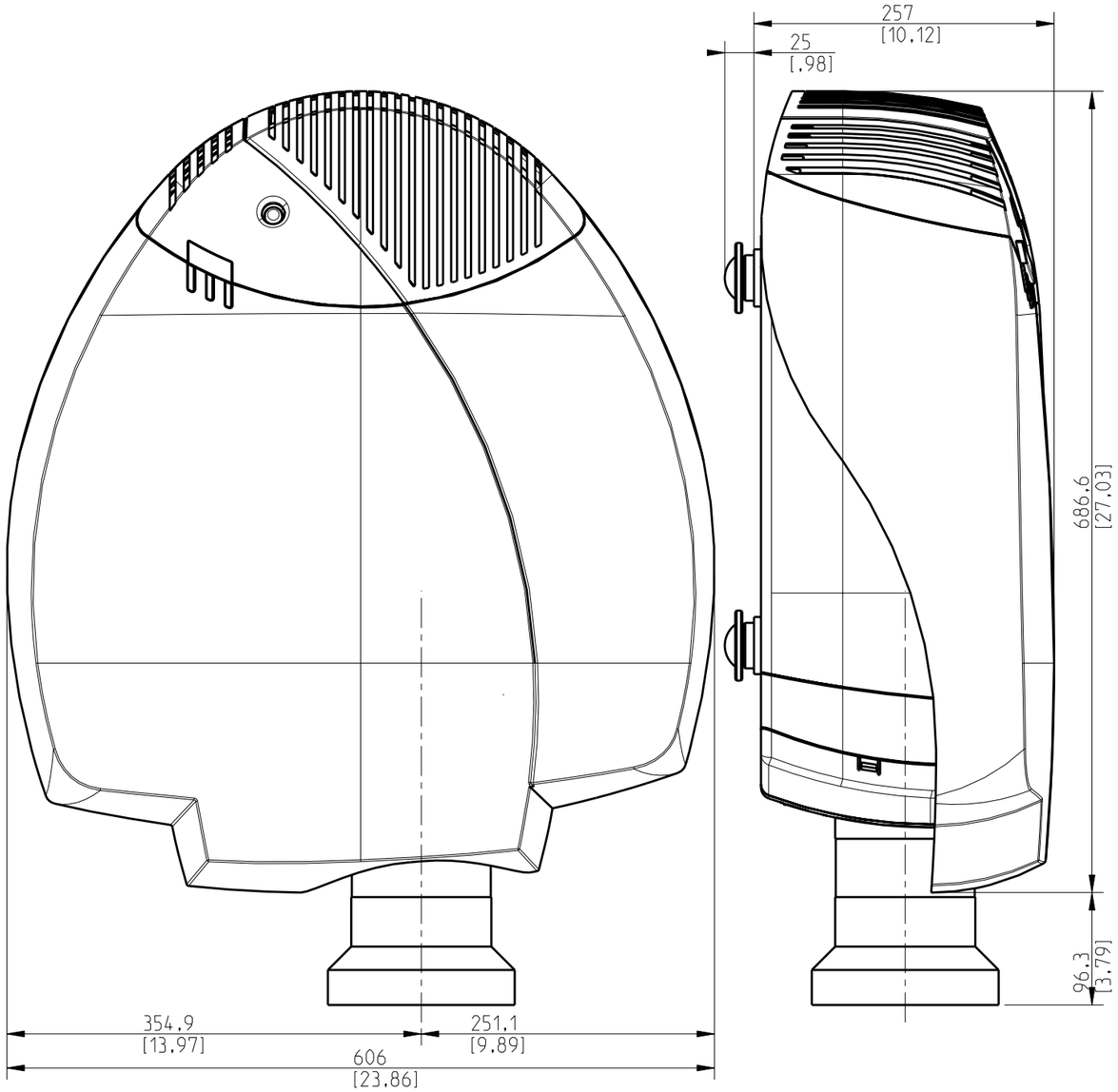

Cinema lenses
R9840900 TLD (0.8) Optional
Throw Ratio : 0.8 : 1
Throw distance : 1.7 - 15 (m)
Maximum screen size (diagonal) : 90" - 787"
Lens Shift Hor. : Wide: -45% => +37%, Tele: Not Available
Lens Shift Vert. : Wide: Up 94% => 50% Down, Tele: Not Available

PROJ. EURO
MM

BARCO