Nominal position

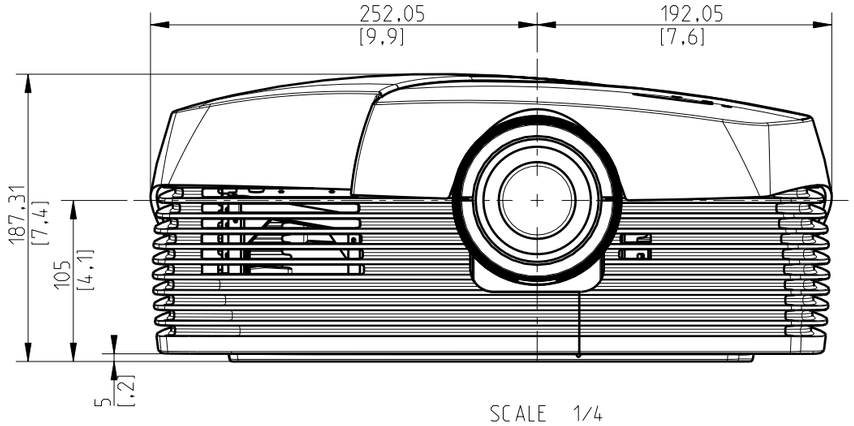

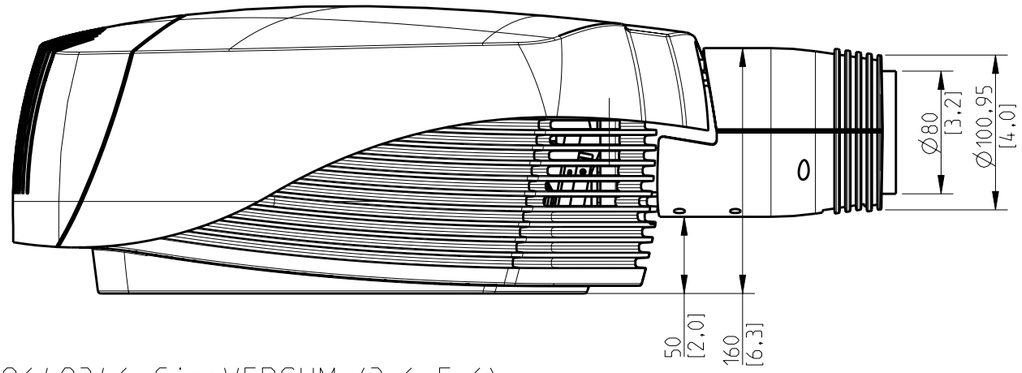

SCALE 1/4

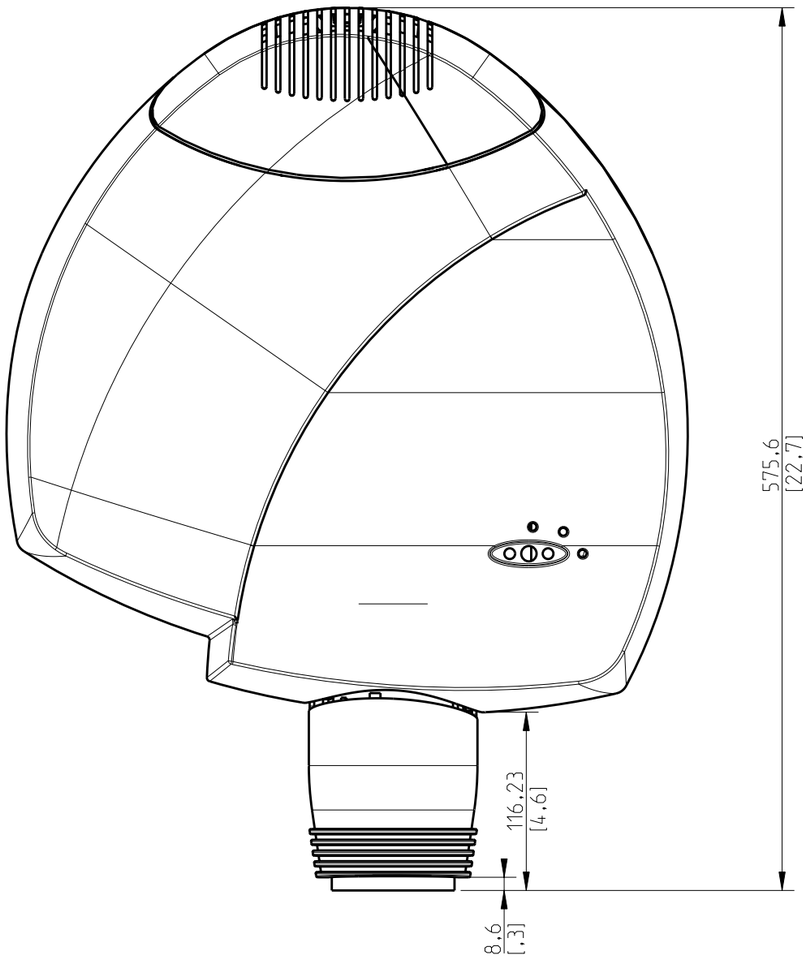

R9642346 CineVERSUM (3.6-5.6)
Throw Ratio 3.6 - 5.6
Maximum screen size (diagonal) 68″ - 285″

Throw distance
Wide: 5.5 - 22 (m)
Tele: 8.6 - 35 (m)

Horizontal Shift
Wide: 0
Tele: 0

Vertical Shift
Wide: -142% => +110%
Tele: -138% => +158%

PROJ. EURO
MM

BARCO