Nominal position

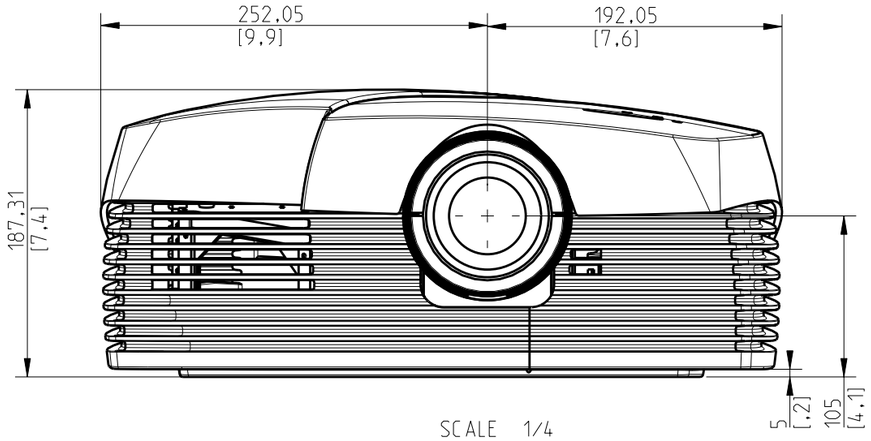

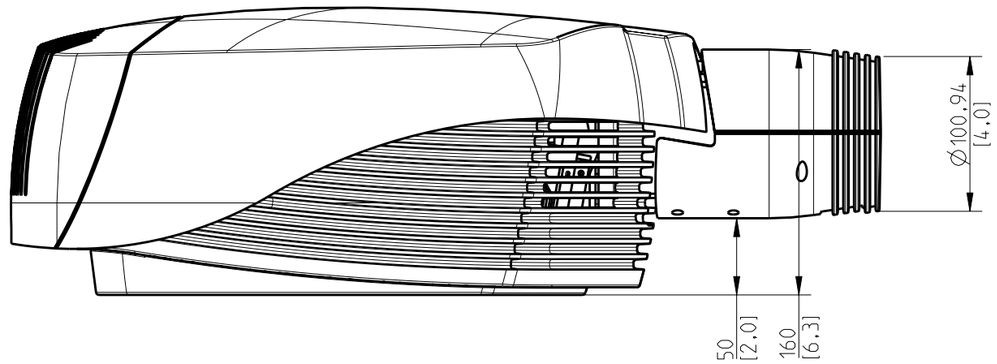

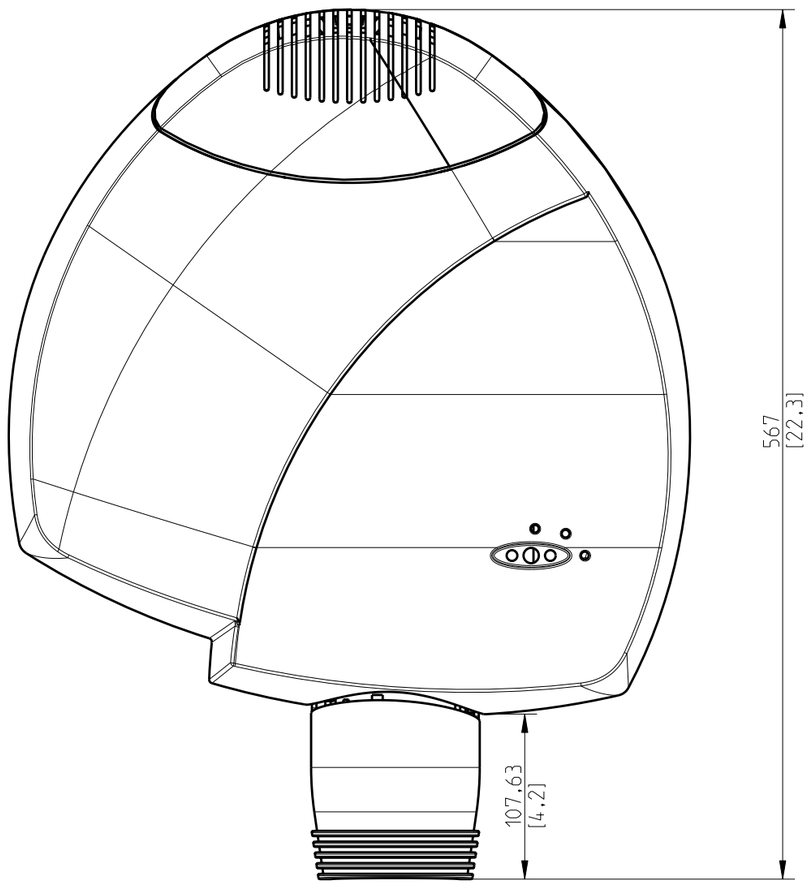

R9642343 CineVERSUM (1.44-1.8)
Throw Ratio 1.44 - 1.8
Maximum screen size (diagonal) 68″ - 285″

Throw distance
Wide: 2.2 => 9.5 (m)
Tele: 2.7 => 11.8 (m)

Vertical Shift
Wide: -142% => +110%
Tele: -138% => +158%

Horizontal Shift
Wide: 0
Tele: 0

PROJ. EURO
MM

BARCO