Nominal position

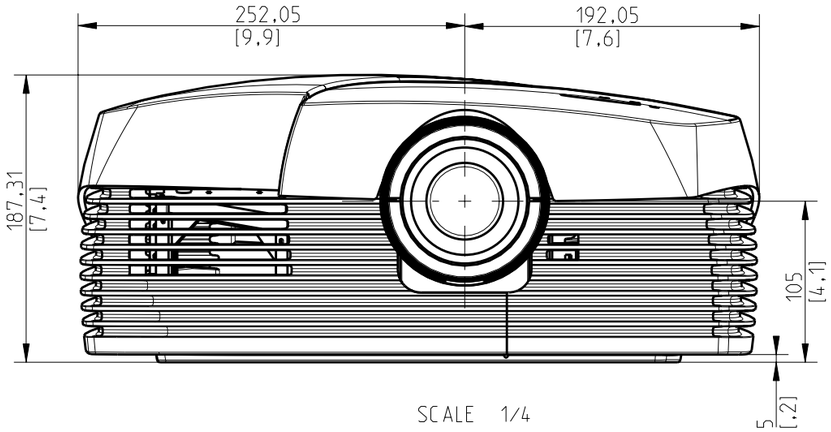

SCALE 1/4

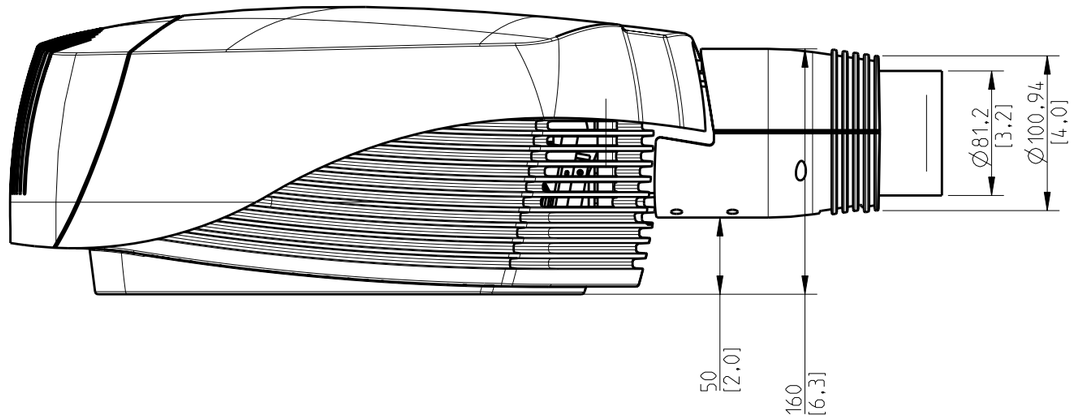

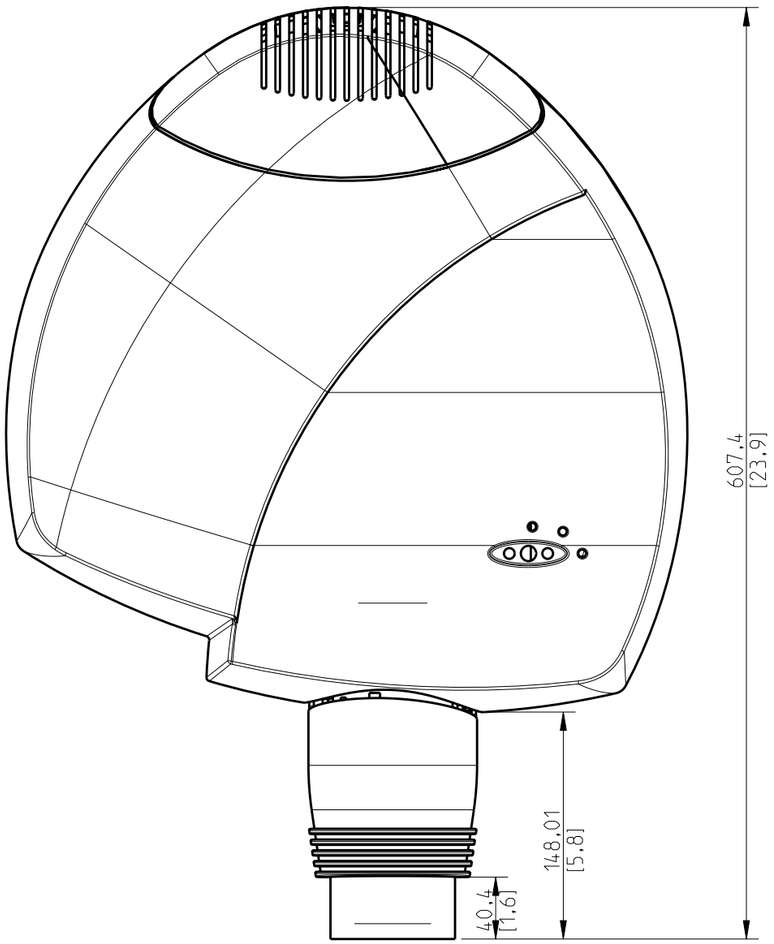

R9642342 CineVERSUM (1.2-1.44)
Throw Ratio 1.2 - 1.44
Maximum screen size (diagonal) 68″ - 285″

Throw distance
Wide: 1.8 - 7.6 (m)
Tele: 2.2 - 9.3 (m)

Horizontal Shift
Wide: 0
Tele: 0

Vertical Shift
Wide: -142% => +110%
Tele: -138% => +158%

PROJ. EURO
MM

BARCO