Nominal position

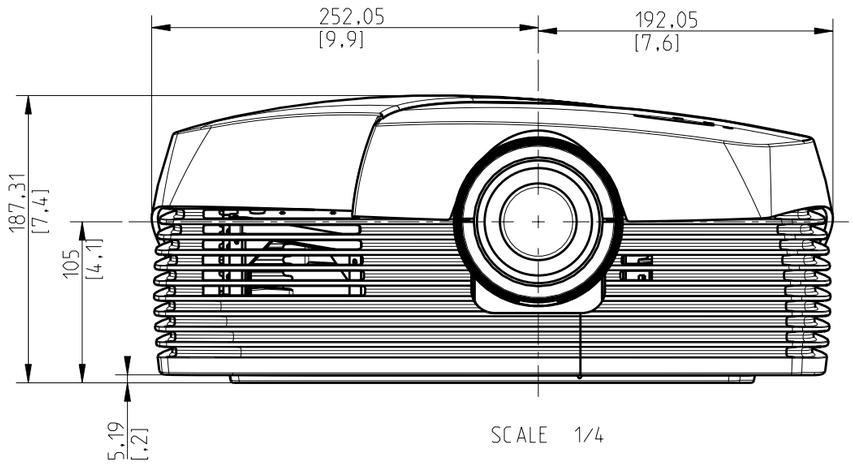

SCALE 1/4

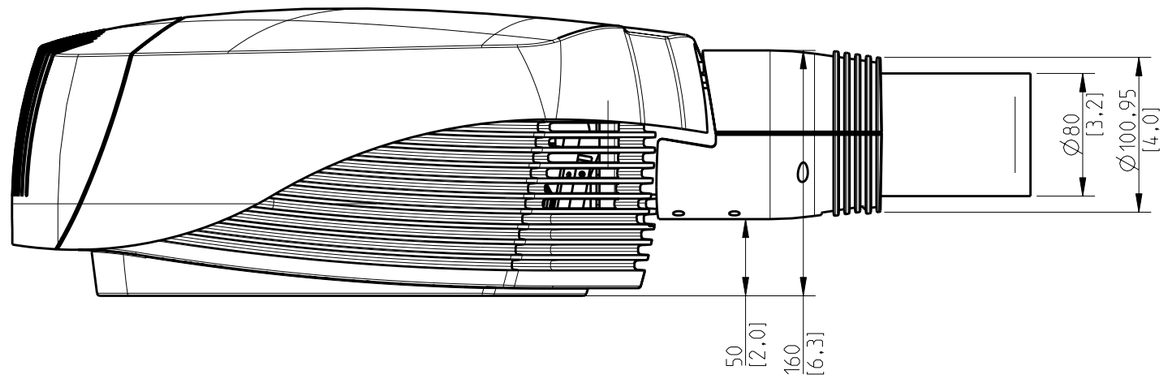

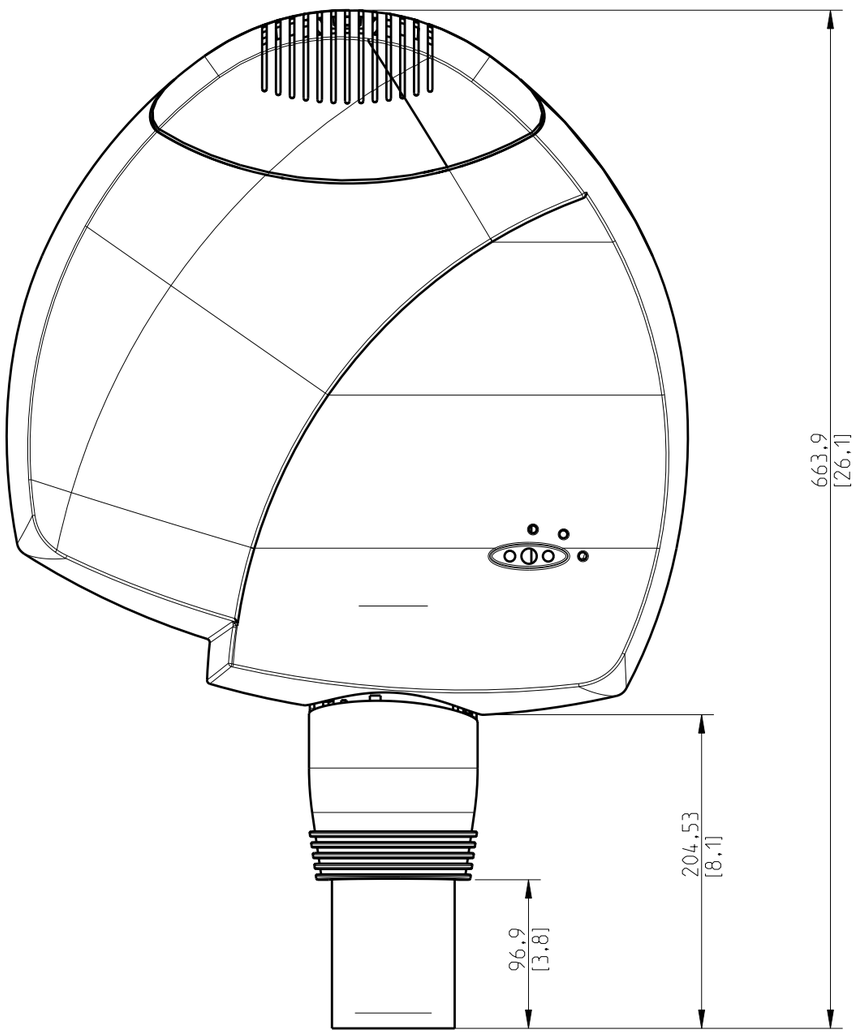

R9642340 CineVERSUM (0.64)
Throw Ratio 0.64
Maximum screen size (diagonal) 90″ - 170″
Throw distance 1.3 - 2.5 (m)

Vertical Shift
Only on-axis

PROJ. EURO
MM

BARCO